I J C T A, 9(2-A), 2016, pp. 453-466
© International Science Press

Quadrotor Unmanned Aerial Vehicle, Dynamics and Control Strategy for Tracking a Desired Trajectory

Salah Nasr*, Kais Bouallegue, Hassen Mekki* and Sundarapandian Vaidyanathan*****

ABSTRACT

In this paper, a synthesis robust stabilisation of a small unmanned aerial vehicle type quadrotor with vertical taking-off and hovering motion is proposed for control the position and altitude tracking. Analytical relations for dynamic modeling, physical phenomena and control of the actions on four rotors that ensure quadrotor motion over a prescribed trajectory with desired values of position and altitude is presented. The quadrotor is controlled with classical proportional integral derivative controller in three state of system: position control, angle control and inputs control. Numerical simulation results are provided to show the good performances of stabilisation and control strategy.

Keywords: PID controller, Quadrotor UAV, Hovering, model, simulation.

1. INTRODUCTION

In recent decades, great interest was shown in robotics. In fact, several areas (military, automotive, medical, industrial, space, ...) require robots to replace men in dangerous or boring situations. Among the robots, a vast area of research is dedicated to air platforms.

Unmanned Aerial Vehicle (UAV) for military, industrial and in urban environment tasks acquired a keen interest in recent years where the UAV will have to operate in enclosed spaces. A number of important applications will require this, e.g. fire and natural disaster search and rescue, police and security services, inspection and surveillance dangerous tasks that put human integrity at risk [1-3]. In civilian sectors, UAV can be used for many applications such as low enforcement, traffic report, aerial photography and more [4]. Many research teams are working on the control and stabilization for the surveillance of land, exploration ground for explosives or hazardous materials and saving human victims at the scene of the disaster.

The quadrotor UAVs presents a dynamic model has six degrees of freedom (DOF) with four rotors that generate only four independent thrust forces. With only four control inputs it is difficult to control all six outputs.UAV are known to be inherently unstable, nonlinear and coupled. Dynamic modeling and configuration of quadrotor were proposed by Mc Kerrow [5] and Hamel et al. [6].

To solve the problem of quadrotor control, different methods for model-based autonomous UAV control have been presented in literature. First all , In [7] the authors presented a backstepping and sliding mode controllers to stabilize the complete system. Thus, in [8,9] a backstepping technique based on the theory of Lyapunov stability and a backstepping sliding mode control are studied.Nonlinear control problems for hovering quadrotor such as feedback linearization control and back-stepping control laws were studied by Altug et al. [10] and Mistler et al. [11]. Therefore, based on the dynamic model of a PVTOL aircraft,

* CEM-Lab ENIS Sfax, National Engineering School of Sousse, University of Sousse, Tunisia, *Email: nasrsalah.doc@gmail.com*

** Department of Electrical Engineering, Higher Institute of Applied Sciences and Technology of Sousse, University of Sousse, Tunisia.

*** Research and Development Centre, Vel Tech University, Avadi, Chennai, Tamil Nadu, India

Castillo et al. [12], Hamel et al. [13] designed controllers for Yaw angular displacement, Pitch and Roll movements of a hovering quadrotor. In [14], Xiong and Zheng have proposed a novel robust terminal sliding mode control algorithm. Some recent control methods are discussed in [22-30].

In this work, our approach is to use a simple nested proportional integral derivative (PID) controller to track a desired trajectory for take-off and hovering motion.

The rest of this paper is organized as follows: The dynamic model of quadrotor is introduced in the next section. Then, the proposed method of control is given in section 3. In section 4, simulation results are presented. Our concluding remarks are contained in the final section.

2. MODELING OF QUADROTOR UAV

2.1. Movements of quadrotor

The ascendant and descendant movement is obtained by varying the speed of the rotors (consequently the thrust produced), if the lift force exceeds the gravity force of quadrotor the movement is ascendant, and if the lift force is less than the gravity force, the movement is descendant.To hover, all the lift force should be only along the z-axis with a magnitude opposite to the force of gravity. Moreover, the lift force created by each rotor must be equal to prevent the vehicle to topple over.The basic motions of quadrotor UAVs are induced by the combination of rotation as shown in Fig. 2

2.2. Dynamic of the Quad Rotor

The structure of a quad-rotor is simple, mainly comprising four rotors fixed to the ends of a symmetrical cross. Fig. 1 shows an example of one proposed structure, the two pair of motors (1, 3) are running in the same direction, whereas the others (2, 4) in the opposite direction to eliminate the anti-torque.

By increasing/decreasing the 2 and 4 rotor's speed conversely produces the Roll angle ϕ allows to move the quadrotor in lateral direction x. Pitch angle θ produced by varying the 1 and 3 rotor's speed allows the quadrotor to move in lateral direction y, and by varying all rotor's speed together with the same values, can change the lift force, affecting the altitude z of quadrotor then Yaw angle ψ produced and enable the motion to take-off. The forces and moments of control the altitude and position of the system provides by the Euler angle orientation (ϕ, θ, ψ), under the conditions ($-\pi \prec \psi \prec \pi$) for Yaw angle, ($-\pi/2 \prec \theta \prec \pi/2$) for Pitch angle, and ($-\pi/2 \prec \phi \prec \pi/2$) for Roll angle.

To describe the motion of a 6 degree of freedom (DOF) rigid body it is usual to define two reference frames as shown in Fig. 3.

- the earth inertial frame E(0, X, Y, Z), and
- the body-fixed frame Q(0, x, y, z).

The equations of motion are more conveniently formulated in the Q-frame because of the following reasons:

- the inertia matrix is time-invariant;
- advantage of body symmetry can be taken to simplify the equations;
- measurements taken on-board are easily converted to body-fixed frame;
- control forces are almost always given in body-fixed frame.

The linear position of the quadrotor (X, Y, Z) is determined by the coordinates of the vector between the origin of the Q-frame and the origin of the E-frame according to the equation of motion. The angular

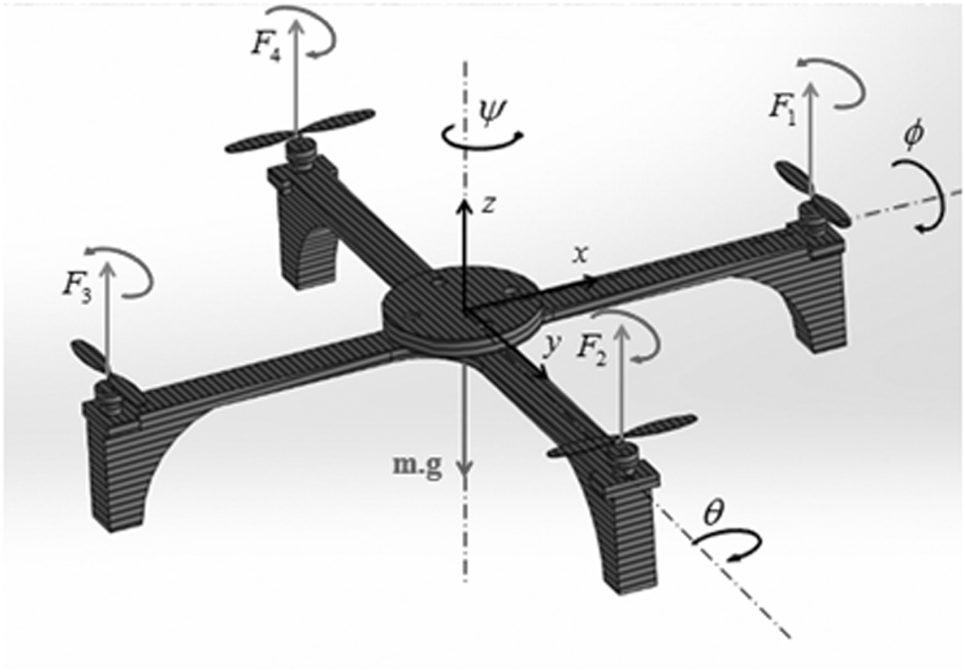

Figure 1: The quadrotor UAV.

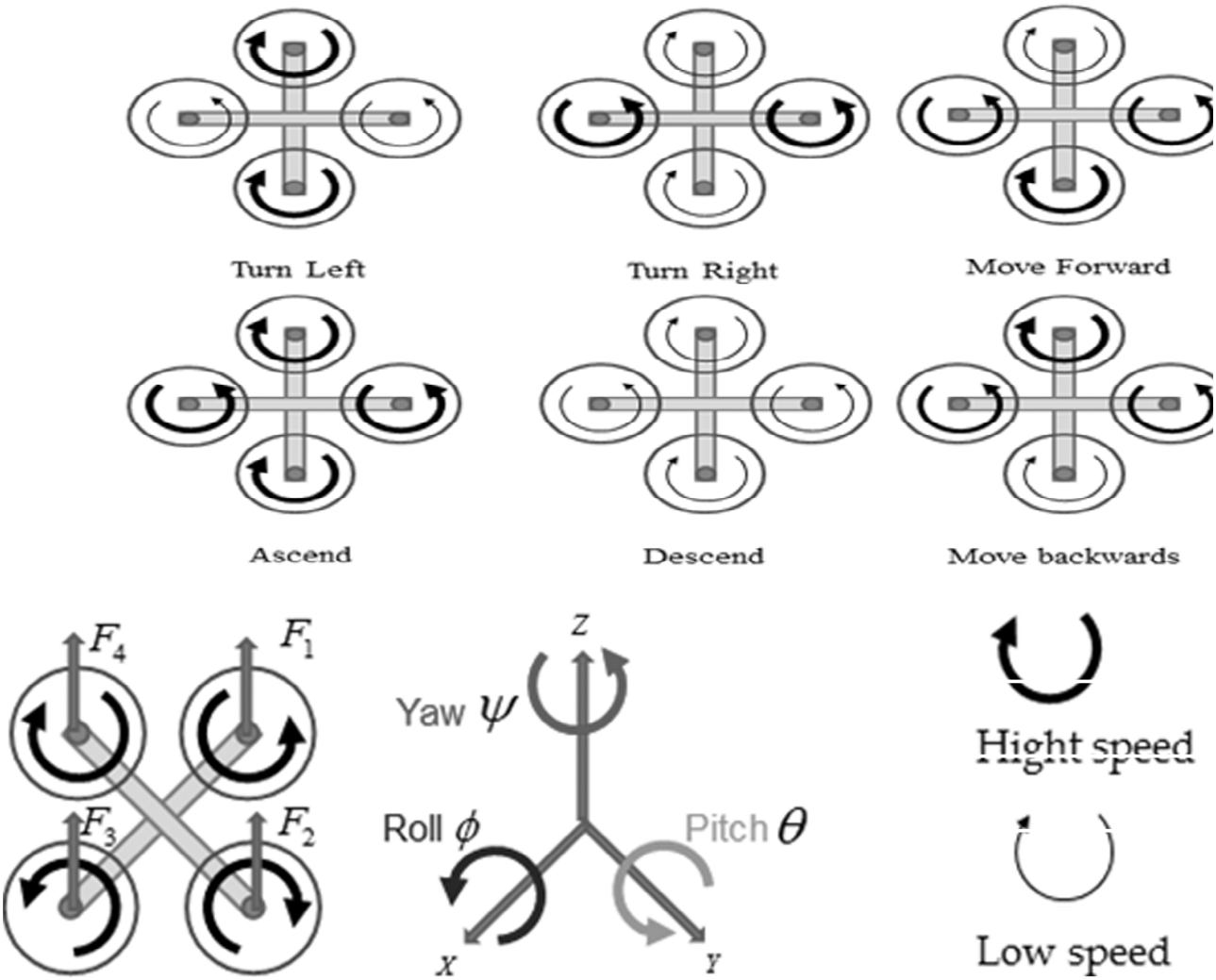

Figure 2: Basic motions of a quadrotor UAV.

Figure 3: General coordinate system.

position (or attitude) of the quadrotor (∅, θ, ψ) is defined by the orientation of the Q-frame with respect to the E-frame. This is given bythree consecutive rotations about the main axes which take the E-frame into the Q-frame.

$$R(x,\phi)=\begin{bmatrix}1 & 0 & 0\\ 0 & \cos\phi & -\sin\phi\\ 0 & \sin\phi & \cos\phi\end{bmatrix}, \tag{1}$$

$$R(y,\theta)=\begin{bmatrix}\cos\theta & 0 & \sin\theta\\ 0 & 1 & 0\\ -\sin\theta & 0 & \cos\theta\end{bmatrix}, \tag{2}$$

$$R(z,\psi)=\begin{bmatrix}\cos\psi & -\sin\psi & 0\\ \sin\psi & \cos\psi & 0\\ 0 & 0 & 1\end{bmatrix} \tag{3}$$

As a full rotation of a system can be described as a product of the rotations about its x, y and z axes. The rotation matrix R between the E and Q frames has the following form [15]:

$$R=\begin{bmatrix}\mathrm{c}\psi c\theta & \mathrm{s}\phi\mathrm{s}\theta\mathrm{c}\psi-\mathrm{s}\psi\mathrm{c}\phi & \mathrm{c}\phi\mathrm{s}\theta\mathrm{c}\psi+\mathrm{s}\psi\mathrm{s}\phi\\ \mathrm{s}\psi\mathrm{c}\theta & \mathrm{s}\phi\mathrm{s}\theta\mathrm{s}\psi+\mathrm{c}\psi\mathrm{c}\theta & \mathrm{c}\phi\mathrm{s}\theta\mathrm{s}\psi-\mathrm{s}\phi\mathrm{c}\psi\\ -\mathrm{s}\theta & \mathrm{s}\phi\mathrm{c}\theta & \mathrm{c}\phi\mathrm{c}\theta\end{bmatrix} \tag{4}$$

Where c and s indicate the trigonometrically functions cos and sin respectively.

Let the vector $[p, q, r]^t$, denotes the quadrotor's angular velocity in the Q-frame. The corresponding transformation matrix from $[\phi, \theta, \psi]^t$ to $[p, q, r]^t$ is given by:

$$\begin{bmatrix}p\\ q\\ r\end{bmatrix}=\begin{bmatrix}1 & 0 & -\sin\theta\\ 0 & \cos\phi & \sin\phi\cos\theta\\ 0 & -\sin\phi & \cos\phi\cos\theta\end{bmatrix}\begin{bmatrix}\dot{\phi}\\ \dot{\theta}\\ \dot{\psi}\end{bmatrix} \tag{5}$$

J is a symmetric positive definite constant inertia matrix of the quadrotor.

$$J=\begin{bmatrix}I_x & 0 & 0\\ 0 & I_y & 0\\ 0 & 0 & I_z\end{bmatrix} \tag{6}$$

• For the force, we note the gravity force $\vec{F}_g$ and the resultant of lift $\sum_{i=1}^{4}\vec{T}_i$ created by the four rotors:

$$\vec{F} = \vec{F}_g + \sum_{i=1}^{4}\vec{T}_i \tag{7}$$

Where ,

$$\vec{F}_g = \begin{bmatrix} 0 \\ 0 \\ -mg \end{bmatrix} \tag{8}$$

And

$$\vec{T}_i = \begin{bmatrix} T_{ix} \\ T_{iy} \\ T_{iz} \end{bmatrix} = lb \begin{bmatrix} \Omega_{i\,x}^2 \\ \Omega_{i\,y}^2 \\ \Omega_{i\,z}^2 \end{bmatrix} \tag{9}$$

Ω_i is the angular speed of rotor i, b denotes the lift coefficient, m denotes the total mass, g represents the acceleration of gravity and l is the distance between the quadrotor center of mass and the rotation axis of propeller.

• For the moment, M is the moments developed by the quadrotor according to the Q-frame. It is described by the following matrix:

$$M = \begin{bmatrix} T_4 - T_2 \\ T_3 - T_1 \\ -D_1 + D_2 - D_3 + D_4 \end{bmatrix} \tag{10}$$

$$D_i = d\Omega_i^2 \tag{11}$$

Where d is the drag coefficient.

We can finally derive the equations governing the dynamics model of quadrotor as described by the following equations [16-19, 7]:

$$\begin{cases} \ddot{\phi} = \dfrac{(I_y - I_z)}{I_x}\dot{\theta}\dot{\psi} - \dfrac{J_r}{I_x}\Omega\dot{\theta} + \dfrac{l}{I_x}U_2 \\ \ddot{\theta} = \dfrac{(I_z - I_x)}{I_y}\dot{\phi}\dot{\psi} - \dfrac{J_r}{I_y}\Omega\dot{\phi} + \dfrac{l}{I_y}U_3 \\ \ddot{\psi} = \dfrac{(I_x - I_y)}{I_z}\dot{\theta}\dot{\phi} + \dfrac{1}{I_y}U_4 \\ \ddot{x} = \dfrac{1}{m}\left(\cos\phi\cos\psi\sin\theta + \sin\phi\sin\psi\right)U_1 \\ \ddot{y} = \dfrac{1}{m}\left(\cos\phi\sin\theta\sin\psi - \sin\phi\cos\psi\right)U_1 \\ \ddot{z} = -g + \dfrac{\cos(\phi)\cos(\theta)}{m}U_1 \end{cases} \tag{12}$$

The system's inputs are posed u_1, u_2, u_3, u_4 and Ω is a disturbance, obtained as:

$$\begin{cases} u_1 = b\left(\Omega_1^2 + \Omega_2^2 + \Omega_3^2 + \Omega_4^2\right) \\ u_2 = b\left(\Omega_4^2 - \Omega_2^2\right) \\ u_3 = b\left(\Omega_3^2 - \Omega_1^2\right) \\ u_4 = d\left(\Omega_1^2 - \Omega_2^2 + \Omega_3^2 - \Omega_4^2\right) \\ \Omega = \Omega_1 - \Omega_2 + \Omega_3 - \Omega_4 \end{cases} \tag{13}$$

The rotors are driven by DC motors with the well-known equations [20]:

$$\begin{cases} v = Ri + L\dfrac{di}{dt} + k_e\omega \\ k_m i = J_r\dfrac{d\omega}{dt} + C_s + k_r\omega^2 \end{cases} \tag{14}$$

Where, v is the motor input, k_e, k_m: are respectively the electrical and mechanical torque constant, C_s: is the solid friction, J_r is the rotor inertia and k_r is the load torque constant.

In this paper, for the hovering control, we consider the angular rates can be taken to be negligible near hover.The simplified model derived from eq. (12) becomes,

$$\begin{cases} \ddot{\phi} = \dfrac{l}{I_x}U_2 \\ \ddot{\theta} = \dfrac{l}{I_y}U_3 \\ \ddot{\psi} = \dfrac{1}{I_y}U_4 \\ \ddot{x} = \dfrac{1}{m}\left(\cos\phi\cos\psi\sin\theta + \sin\phi\sin\psi\right)U_1 \\ \ddot{y} = \dfrac{1}{m}\left(\cos\phi\sin\theta\sin\psi - \sin\phi\cos\psi\right)U_1 \\ \ddot{z} = -g + \dfrac{\cos(\phi)\cos(\theta)}{m}U_1 \end{cases} \tag{15}$$

It is evident from eq.(15) that the simplified system is linear and not coupled. Thus, a linear PID controller design was chosen to be used.

3. STABILIZING AND CONTROL STRATEGY

Quadrotor are dynamically unstable. Although unstable dynamics is not desirable,therefore suitable control strategy are needed to make them stable.

The objective of this part of stabilization and control is to develop a method that calculates the voltages of four motors from the two main entrances. These are the desired yaw angle (ψ_d), spatial desired position (x_d, y_d, z_d) and real values that are provided by the sensors (accelerometer, gyro and altimeter).

Our stabilization strategy and control is divided into three blocks of controllers (C_1, C_2 and C_3) as shown in Fig. 4. The first block controller C_1 contains three PID controllers: control of x position, control of y position and control of z altitude with invoking eq. (17), eq. (18) and eq. (19). The second block controller C_2 used to control of Yaw (ψ_d), Roll (ϕ_d) and Pitch (θ_d) (generated from the state block) by using eq.(20), eq. (21) and eq. (22). The last block C3 controllers include the control inputs of system generated by the force and torque block (illustrate by eq. (23)). The force and torque block include all computed and transformation of the force and torque injected as inputs system with invoking the matrix (5), (6) and (10).

The state block discloses using to generate the Euler angles ϕ_d and θ_d defined as follows:

$$\begin{cases} \phi_d = \operatorname{asin}\left(\dfrac{(\ddot{x}_d \sin\psi_d - \ddot{y}_d \cos\psi_d)}{\sqrt{\ddot{x}_d^{\,2} + \ddot{y}_d^{\,2} + \ddot{z}_d^{\,2}}}\right) \\ \theta_d = \operatorname{atan}2((\ddot{x}_d \cos\psi_d + \ddot{y}_d \sin\psi_d), z_d) \end{cases} \tag{15}$$

The dynamic block of quadrotor present the global dynamics of quadrotor as described in section 2.

The control algorithms for the position and angle, roll, pitch and yaw, of the UAV are designed based on PID controllers as shown in Fig. 4. We calculate the difference between the desired value and the actual value and a PID controller is used to minimize this error. The control input u to controlling the position and angle of the UAV respecting to the reference input designed as follows:

$$u(t) = K_p e\ (t) + K_i \int_0^t e(t)dt + K_d \frac{d}{dt} e(t) \tag{16}$$

This principle is applied in our model to control the spatial position x, y and z as follows:

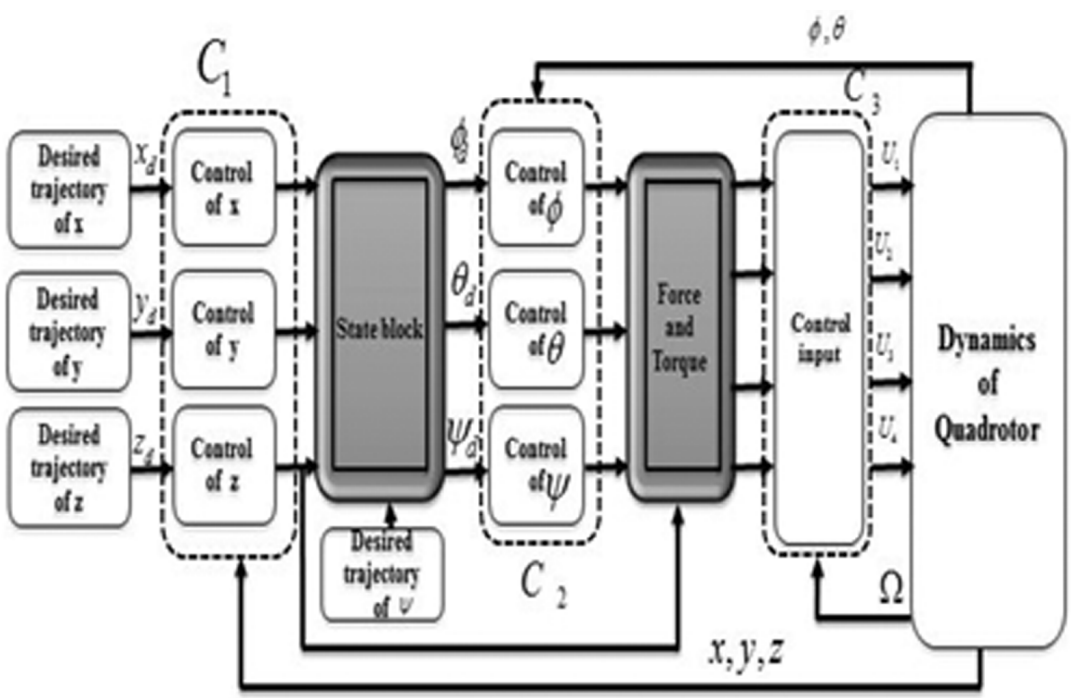

Figure 4: Synoptic scheme of control strategy.

$$u_x = k_p(x - x_d) + k_i \int_0^t (x - x_d)dt + k_d \frac{d(x - x_d)}{dt} \tag{17}$$

$$u_y = k_p(y - y_d) + k_i \int_0^t (y - y_d)dt + k_d \frac{d(y - y_d)}{dt} \tag{18}$$

$$u_z = k_p(z - z_d) + k_i \int_0^t (z - z_d)dt + k_d \frac{d(z - z_d)}{dt} \tag{19}$$

Where k_p, k_i, k_d are PID controller gains for the position control.

The control algorithms for roll, pitch and yaw, of the UAVare designed based on PID controllers as follows:

$$u\phi = kp_a(\phi - \phi_d) + ki_a \int_0^t (\phi - \phi_d)dt + kd_a \frac{d}{dt}(\phi - \phi_d) \tag{20}$$

$$u\theta = kp_a e_\theta(\theta - \theta_d) + ki_a \int_0^t (\theta - \theta_d)dt + kd_a \frac{d}{dt}(\theta - \theta_d) \tag{21}$$

$$u\psi = kp_a(\psi - \psi_d) + ki_a \int_0^t (\psi - \psi_d)dt + kda \frac{d}{dt}(\psi - \psi_d) \tag{22}$$

With kp_a, ki_a, kd_a are parameters of PID controller for the control of Roll angle , Pitch angle and Yaw angle.The four inputs rotors are controlled as follows [17]:

$$u_i(t) = kpe_{ui}(t) + ki \int_0^t e_{ui}(t)dt + kd \frac{d}{dt} e_{ui}(t) \tag{23}$$

As shown in figure 5, the quadrotor control strategy is designed using PID controllers. This structure clearly shows the location of nested controllers.

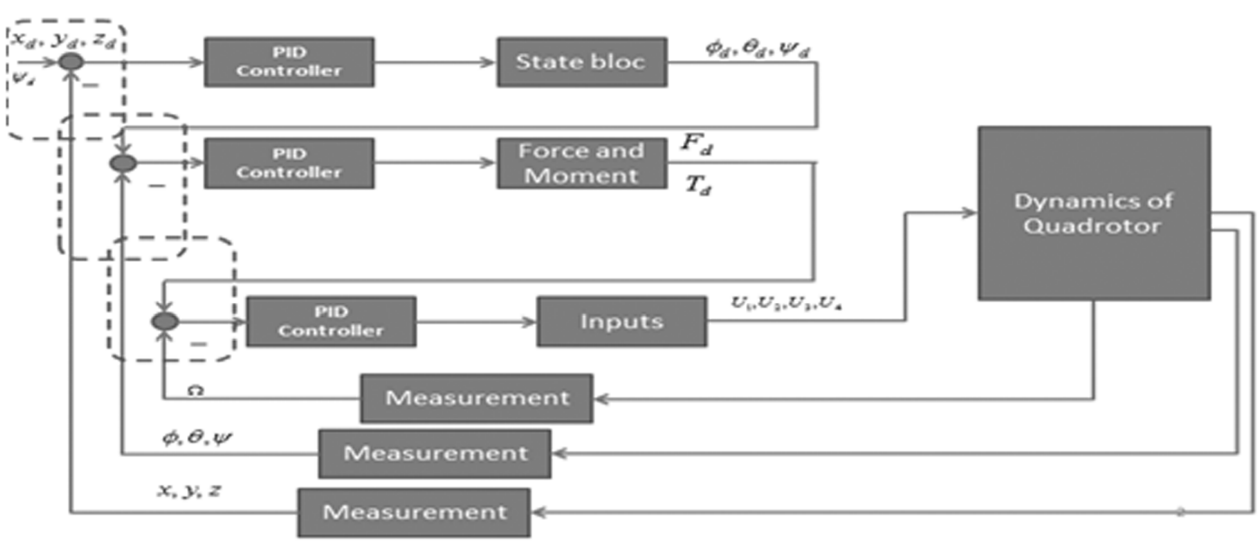

Figure 5: Basic structure of nested PID controllers for the quadrotor.

4. SIMULATION RESULTS

The mathematical model described by equation (12) and (13) was simulated on MATLAB/Simulink, with motor speed and basic system parameters (listed in Table1) as inputs.The desired trajectories consists of two phases: taking off and hovering.

The desired/reference value of Yaw angle and altitude used in simulation tests arechosen as follows: $\psi_d = \pi /6.28$ rad and $Z_d = 25$ m.

The PID parameters can be set as{kp = 6, ki = 0, kd = 9} for the position x, y and z.

The PID parameters for the Roll, Pitch and Yaw Angle are the same because of the symmetry of dynamics quadrotor, it can be set as $\{kp_a = 10, ki_a = 0, kd_a = 15\}$.

The graph of desired trajectories given in Fig.6 and Fig. 8 shows clearly the desired position (x_d, y_d and z_d) and angle (Roll, Pitch and Yaw). Fig. 7 represents the quadrotor positions. We can see well ,from this figure, a very good tracking of the desired trajectories.

Table 1
Model Parameter

Parameter	*Value*	*Unit*
m	1	kg
I_x	8.1e-3Kg.m^2	
I_y	8.1e-3	Kg.m^2
I_z	14.2e-3	Kg.m^2
J_r	104e-6	Kg.m^2
b	54.2e-6	N/rad/s
l	0.24	m
g	9.81	m/s^2
d1.1e-6N.m/rad/s		

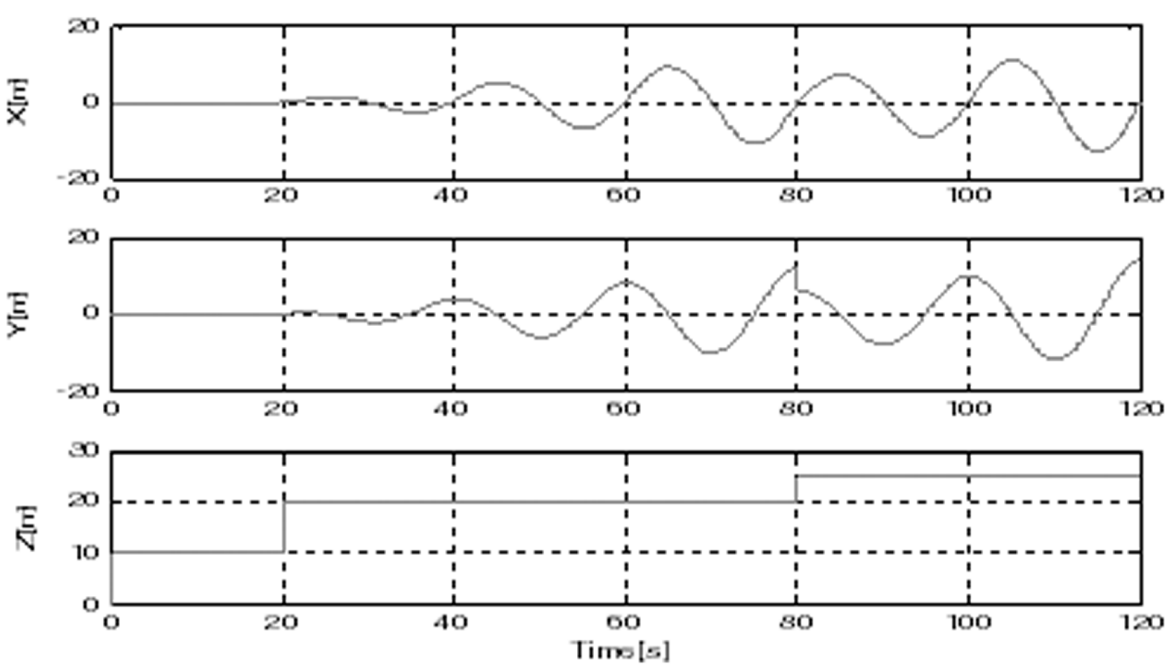

Figure 6: Graph of desired trajectories along (X, Y, Z)

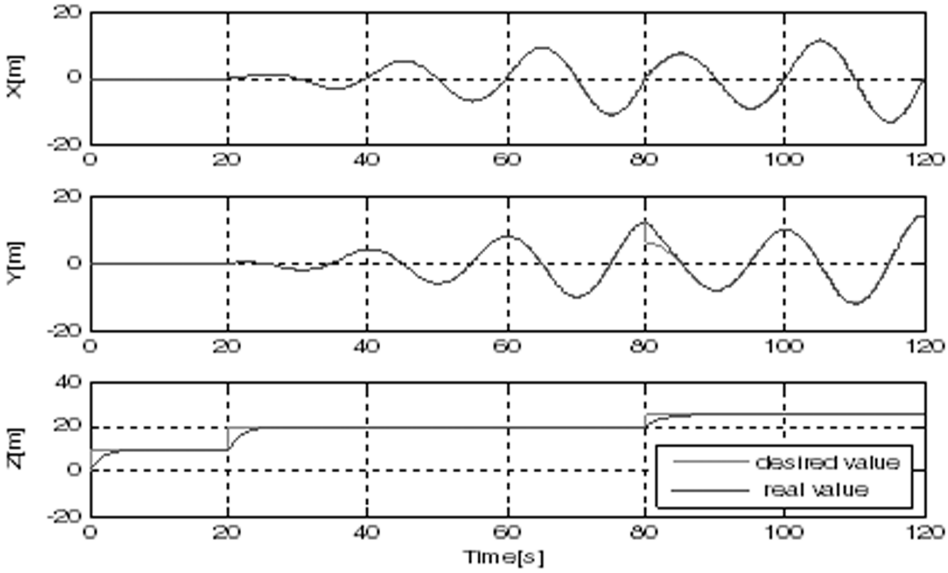

Figure 7: Tracking Simulation results of trajectories along (X, Y, Z).

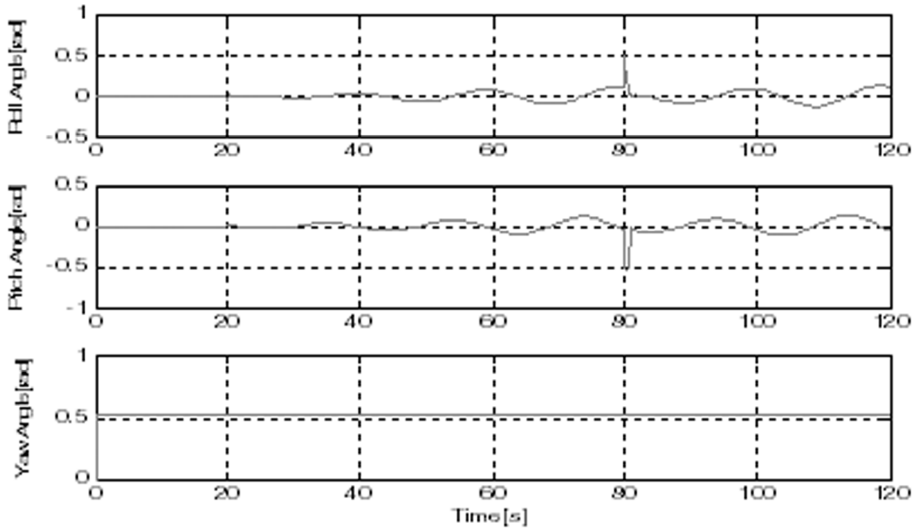

Figure 8: Graph of desired Roll, Pitch and Yaw .

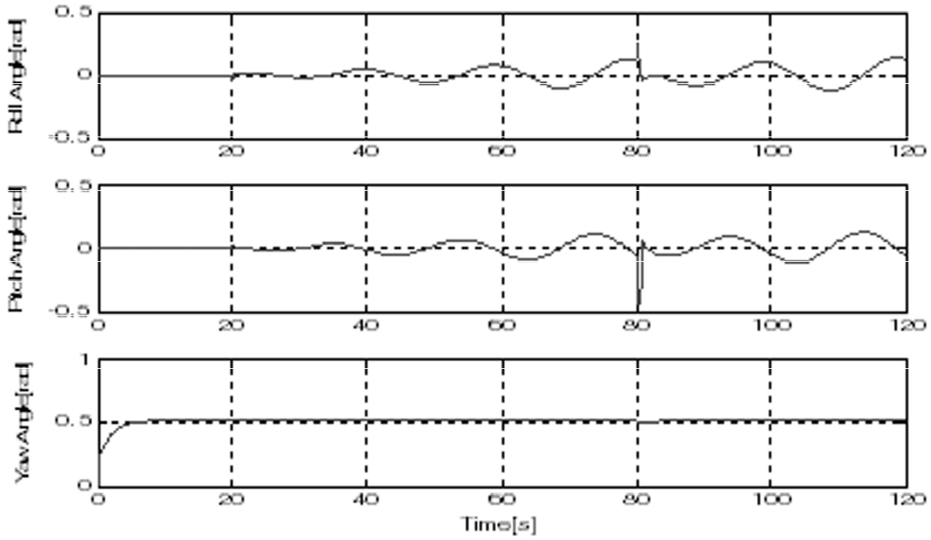

Figure 9: Simulation result of Roll, Pitch and Yaw.

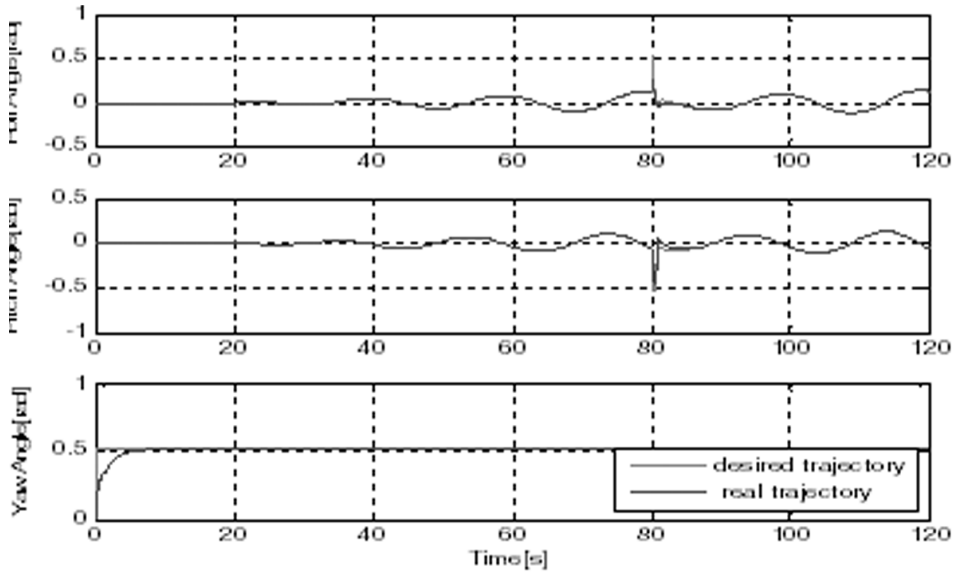

Figure 10: Tracking simulation results of trajectories along the Roll (ϕ), Pitch (θ) and Yaw angle (ψ) .

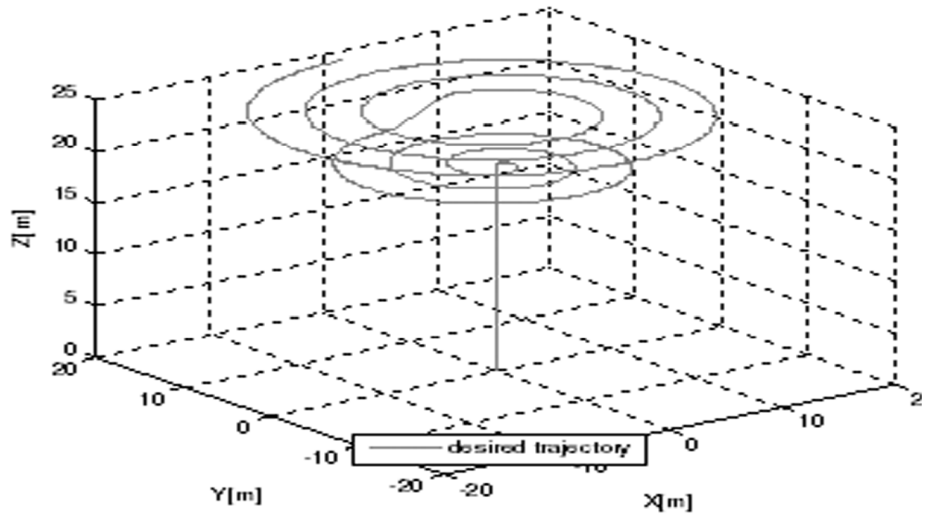

Figure 11: Simulation result of desired trajectory in 3D.

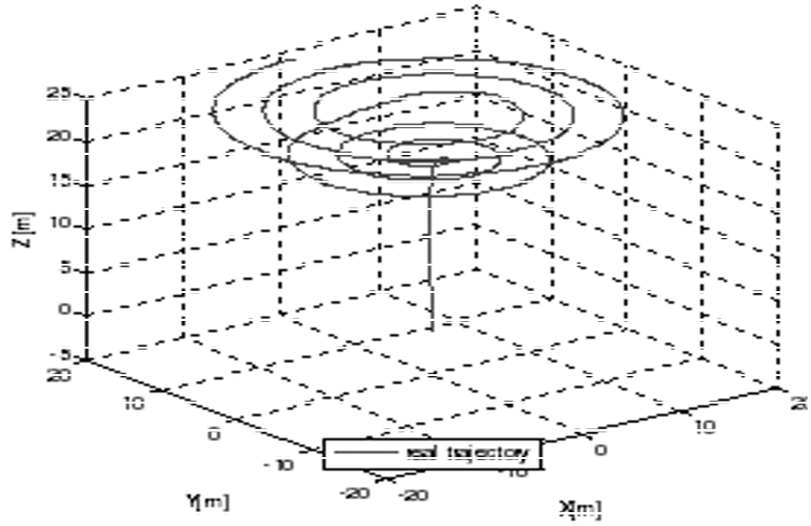

Figure 12: Simulation result of real trajectory in 3D.

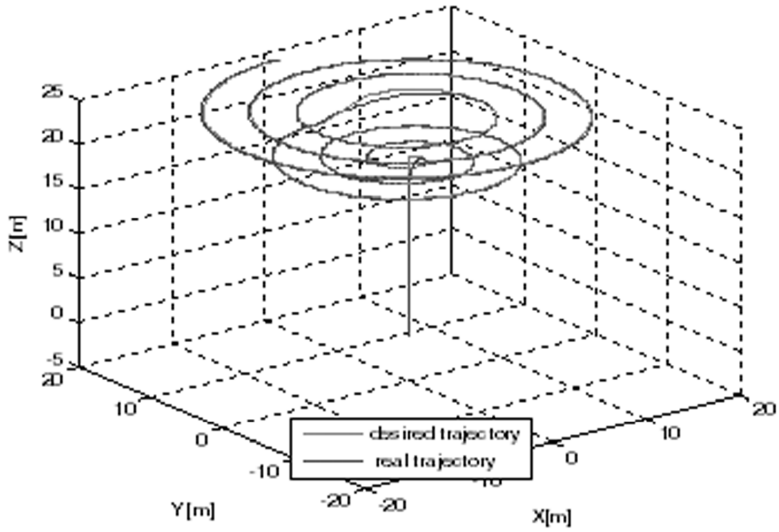

Figure 13: Tracking Simulation results of global trajectories in 3D.

Fig. 9 shows the roll, pitch and yaw angles during the motion.

Fig. 11 represents the trajectory of the desired movements for quadrirotor. It describes perfectly the movement of take-off and hover.

As shown in Fig.12, the performance of the real trajectory control is very satisfactory.

Fig. 13 describes the 3D position of quadrotor during the flight. This figure shows a good robustness towards stability and tracking for desired trajectory. Which explains the efficiency of stabilizing and control strategy developed in this paper.

Simulation results presented at the end of this paper, confirm that the proposed stabilisation and control strategy could be succefully applied on UAV. The PID controller proved to be well adapted to the quadrotor when flying and hovering.

6. CONCLUSION

This presented work studies the stabilization and contol for easy taking-off and hovering of a small quadrotor UAV using the proposed control strategy based on three state PID control method, this PID controller is based on nested loops. The result of simulation proves that the adopted method of control is simple, fast and effective for taking-off and hovering.

The take-off and hovering tasks is still challenging while the cover area varied from an environment to others. Next we will focus on new and more effective control methods for UAV [21], and how to implement control algorithms in more complicated environments is another challenging issue in our future work.

REFERENCES

[1] G.V. Rafflo,M.G. Ortega and F.R. Rubio,"An integral predictive/nonlinear H1 control structure for a quadrotor helicopter,"*Automatica*, **46** (1), 29-39, 2010.

[2] L. Derafa, A. Benallegue and L. Fridman, "Super twisting control algorithm for the attitude tracking of a four rotors UAV,"*Journal of the Franklin Institute*, **349**, 685-699, 2012.

[3] L. Garcia-Delgado, A. Dzul, V. Santibanez and M. Llama, "Quadrotors formation based on potential functions with obstacle avoidance,"*IET Control Theory and Applications*, **6** (12), 1787-1802, 2012.

[4] K.P. Valavanis, P. Oh and L.A. Piegl, *Unmanned Aircraft Systems*, Springer, Berlin, Germany, 2008.

[5] P. McKerrow, "Modelling the Draganflyer four-rotor helicopter," Proc. of IEEE International Conference on Robotics and Automation, **ICRA-2004**, 3596–3601, 2004.

[6] T. Hamel, R. Mahony, R. Lozano and J. Ostrowski, "Dynamic modeling and configuration stabilization for an X4-flyer,"*IFAC Proceedings Volumes*, **35** (1), 217-222, 2002.

[7] S. Bouabdellah, and R. Siegwart,"Backstepping and sliding mode techniques applied to an indoor micro quadrotor," Proc. of the 2005 IEEE International Conference on Robotics and Automation, Barcelona, Spain,**ICRA-2005**, 2259-2264, 2005.

[8] T. Madani, and A. Benallegue, "Backstepping control for a quadrotor helicopter," Proc. of the IEEEConference on Intelligent Robots and Systems,**IROS-2006**, 3255- 3260, 2006.

[9] T. Madani, and A. Benallegue. "Backstepping sliding mode control applied to a miniature quadrotor flying robot",Proc. of the IEEE Conference on Industrial Electronics, Paris, France, **IECON-2006,** 700-705, 2006.

[10] E. Altug, J.P. Ostrowskiand R. Mahony, "Control of a quadrotor helicopter using visual feedback," Proc. of IEEE International Conference on Robotics and Automation, **ICRA-2002**, 72–77, 2002.

[11] V. Mistler, A. Benallegue and N.K. M'Sirdi, "Exact linearization and non-interacting control of a 4 rotors helicopter via dynamic feedback," Proc. of IEEE International Workshop on Robot and Human Interactive Communication, Bordeaux, Paris, France, **ROMAN-2001**, 586–593, 2001.

[12] P. Castillo, A. Dzuland R. Lozano,"Real-time stabilization and tracking of a four-rotor mini rotorcraft,"*IEEE Transactions on Control Systems Technology*, **12** (4), 510-516, 2004.

[13] J.S. Chern, Z.C. Hongand Y.T. Chen, "Approximate chattering arc for minimum time flight," *Acta Astronautica*, **35** (9-11), 623-631, 1995.

[14] J.J. Xiong andE.H. Zheng, "Position and attitude tracking control for a quadrotor UAV,"*ISA Transactions*,**53,** 725-731, 2014.

[15] T. Bresciani, *Modelling, Identification and Control of a Quadrotor Helicopter*, PhD Thesis, Department of Automatic Control, Lund University, 2008.

[16] K. Alexis, G. Nikolakopoulos and A. Tzes, "Model predictive quadrotor control:attitude, altitude and position experimental studies,"*IET Control Theory and Applications*, **6** (12), 1812-1827, 2012.

[17] R. Xu and U. Özgüner, "Sliding mode control of a class of underactuated systems," *Automatica*, **44**(1), 233-241, 2008.

[18] D.H. Shim, J.S. Han and H.T. Yeo, "A development of unmanned helicopters for industrial applications," in *Unmanned AirCraft Systems* (Ed., K.P. Valavanis, P. Oh and L.A. Piegl), 407-421, Springer, Berlin, Germany,2009.

[19] H.Khebbache, B.Sait, and F.Yacef, "Modeling and stabilizing control laws design taking into account the actuator faults for an UAV type-quadrotor", *Journal of Automation and Systems Engineering*, **6** (2), 84-95, 2012.

[20] A. Manecy, N. Marchand, F. Ruffier and S. Viollet, "X4-MaG : A low-cost open-source micro-quadrotor and its Linux-based controller,"*International Journal of Micro Air Vehicles*,**7** (2), 89-99, 2015.

[21] H.Duan and P. Li, "Progress in control approaches for hypersonic vehicle,"*Science China Technological Sciences*,**55** (10) 2965-2970, 2012.

[22] S. Vaidyanathan and S. Pakiriswamy, "A five-term 3-D novel conservative chaotic system and its generalized projective synchronization via adaptive control method," International Journal of Control Theory and Applications,**9** (1), 61-78, 2016.

[23] S. Vaidyanathan, "A novel 3-D conservative chaotic system with a sinusoidal nonlinearity and its adaptive control," *International Journal of Control Theory and Applications*, **9** (1), 115-132, 2016.

[24] S. Vaidyanathan and A. Boulkroune, "A novel hyperchaotic system with two quadratic nonlinearities, its analysis and synchronization via integral sliding mode control," *International Journal of Control Theory and Applications*, **9** (1), 321-337, 2016.

[25] S. Vaidyanathan, "Mathematical analysis, adaptive control and synchronization of a ten-term novel three-scroll chaotic system with four quadratic nonlinearities," *International Journal of Control Theory and Applications*, **9** (1), 1-20, 2016.

[26] S. Vaidyanathan, "An eleven-term novel 4-D hyperchaotic system with three quadratic nonlinearities, analysis, control and synchronization via adaptive control method," *International Journal of Control Theory and Applications*, **9** (1), 21-43, 2016.

[27] S. Vaidyanathan and K. Rajagopal, "Analysis, control, synchronization and LabVIEW implementation of a seven-term novel chaotic system," *International Journal of Control Theory and Applications*, **9** (1), 151-174, 2016.

[28] S. Vaidyanathan, "An eleven-term novel 4-D hyperchaotic system with three quadratic nonlinearities, analysis, control and synchronization via adaptive control method,"*International Journal of Control Theory and Applications*, **9** (1), 21-43, 2016.

[29] S. Sampath, S. Vaidyanathan and V.-T. Pham, "A novel 4-D hyperchaotic system with three quadratic nonlinearities, its adaptive control and circuit simulation," *International Journal of Control Theory and Applications*, **9** (1), 339-356, 2016.

[30] A. Sambas, S. Vaidyanathan, M. Mamat, W.S.M. Sanjaya and R.P. Prastio, "Design, analysis of the Genesio-Tesi chaotic system and its electronic experimental implementation," *International Journal of Control Theory and Applications*, **9** (1), 141-149, 2016.